Design And Construction Of An Integrated Digital Laboratory Multimeter

Areo Samuel Oluwaseun[a*] Olatunde Micheal Oni[b] Olusegun Olabisi[c] Adebayo Segun Adewumi[d] Olusoji Amos Ogunbode[e] Ajadi Opeyemi Samuel[f] Shittu Hassan Adebayo[g]

[ac]*LadokeAkintola University of Technology, Department of Science Laboratory Technology, P.M.B 4000 Ogbomoso, Oyo State, Nigeria.*

[bdeg]*LadokeAkintola University of Technology, Department of Pure and Applied Physics, P.M.B 4000 Ogbomoso, Oyo State, Nigeria.*

[f]*LadokeAkintola University of Technology, Department of Electrical and Electronics P.M.B 4000 Ogbomoso, Oyo State, Nigeria.*

[a*]*Eamil:soareo60@lautech.edu.ng*

Abstract

This paper presents an approach to designing and constructing an integrated digital laboratory multimeter. In a modern electronics laboratory, a digital multimeter with high precision and a digital displaying mechanism is an essential device**.** This research work describes the design and construction of a digital multimeter using the PIC16f876a microcontroller. The design was divided into two parts, the firmware, and the hardware. The firmware code was written using the (micro-pro for PIC). The code was embedded into the microcontroller using the pickit3 programmer board, and the hardware; a 9 volts battery was used to power the meter. This work was compared with a series of the existing digital multimeter in the market and the results show little or no variance of the measurable values and it was observed that the meter constructed has high precision and accuracy percentage. The power supply unit ranges from 1.5V to 12V which makes the work become two interfaces.The digital laboratory multimeter was carefully designed and implemented in this work, the design proved to be efficient and cost-effective.

Keywords: digital, multimeter, microcontroller;

1. Introduction

A Multimeter is an instrument used for measuring electrical parameters between two points of an electrical circuit. Multimeters are instruments that are used to measure electrical quantities such as voltage, current, frequency, capacitance, and resistance. Basic functionality includes measurement of potential in volts, resistance in ohms, and current in amps. Multimeters can also be used to find electronic and electrical problems. Advance units come with more features such as capacitors and diodes to increase their capabilities. [1] [3]Nowadays many measuring instruments have been used in all laboratories throughout the world. Unfortunately, their accuracies are mostly proportional to the time and period. As time passes, they may function incorrectly and generate some errors. The mistaken results from such instruments can cause

serious problems in the economic system and life safety since they will be used for validating product standards in the importing and exporting industries. To ensure that they work perfectly, the calibration process is required. In the past, the calibration has to be performed manually and this process usually takes a long time. Presently, fully automatic calibration systems have been used worldwide and they play an important role in the calibration of measurement instruments.[2] [3]

As modern production techniques dictate working to tighter and tighter accuracy limits, and as economic forces limiting production costs become more severe, so the requirement for instruments to be both accurate and cheap becomes ever harder to satisfy. This latter problem is at the focal point of the research and development efforts of all instrument manufacturers. In the past few years, the most cost-effective means of improving instrument accuracy has been found in many cases to be the inclusion of digital computing power within instruments themselves. These intelligent instruments, therefore, feature prominently in current instrument manufacturers' catalogs. [6]

All of these can be interdependent variables in a single process requiring complex microprocessor systems for total control. Due to the rapid advances in technology, instruments in use today may be obsolete tomorrow, as new and more efficient measurement techniques are constantly being introduced. These changes are being driven by the need for higher accuracy, quality, precision, and performance. To measure parameters accurately, techniques have been developed that were thought impossible only a few years ago [5] [7].

It was found in the science Laboratory in Nigeria Schools for measuring electrical parameters are analogue stand-alone devices for measuring one parameter. Integrated measurement devices, whether analog or digital capable of offering multi-function are expensive and unavailable. Efforts have been put together to design and construct a digital measuring device for handling more than three physical parameters using a Programmable Integrated Circuit (PIC) microcontroller.

2 Methodology

2.1 Components

The components used in this research include the following; Pic16f876a, Acs172, Capacitor, LM 35, Resistor, Optocoupler(pc817), LCD (16x2), AC to DC converter, and 9V battery. Which are further described below.

2.1.1 Pic16f876a Microcontroller

Pic16f876a microcontroller contains 8 Kb flash system memory around 10,000 times it is programmable and can be erased. It has 512 bytes of EEPROM (Electrically erasable programmable memory) and can perform a write or erase operation 100,000 times. It also has 1 Kb internal Static RAM. It contains 28 input lines that come from three different ports. The three different ports are Port-a, Port-b, and Port-c. The microcontroller measures the AC voltage, DC voltage, current, frequency, and temperature. The operation of the digital multimeter condition and result was displayed on the LCD screen.

2.1.2 ACS 712

The ACS 712 is a current sensor and it was used to measure AC and DC drawn by the load.

2.1.3 Capacitor

The capacitor used to smoothen the measured parameters to avoid unnecessary noise in the microcontroller

2.1.4 LM35

The LM35 was used to measure the temperature of the environment which outputs analog signals to the microcontroller in turn converts it to a digital signal and processes it to be displayed.

2.1.5 Resistor

The resistor is used to step-down high input parameters to be measured in other to protect the microcontroller.

2.1.6 Optocoupler (PC817)

The transistor is used to sharpen the AC sine wave into a square wave to measure the frequency and also to ensure electrical isolation between the microcontroller and the main frequency being measured.

2.1.7 AC to DC converter (rectification stage)

Rectification is the process of converting alternating current to direct current to get a stable input voltage for the adjustable voltage regulator.

2.1.8 LCD Screen (16x2)

This is the component that displays the operation of the design for better interaction with the user and also to display the measured parameters.

2.1.9 9 volts battery

The 9 volts battery in this design was used to power the meter itself.

2.2 Principle of Operation

The microcontroller employed in the meter was PIC16f876A. The design was divided into two parts, the firmware, and the hardware. The firmware code was written using the (micro-pro for PIC). The code was embedded into the microcontroller using the pickit3 programmer board, and the hardware; a 9 volts battery was used to power the meter, followed by an AC to DC converter which was used to first convert the AC voltage to DC voltage, to enable the microcontroller measure the AC voltage. The DC measuring part, a DC to DC step-down converter was constructed using a voltage divider. A Zener diode was used to regulate over-voltage which serves as protection for measuring pin.

A current sensor, ACS712 was used for current measurement. The voltage was stepped down to a safe level for the microcontroller then the code already uploaded in the chip count the rising and falling edge of the inputted voltage for one second to make frequency measurement easy.

2.3 Combined Circuit Diagram

An integration of different components and methods described earlier yielded the combined circuit diagram of the work presented as shown in figure 1.

2.4 Construction and Calibration

The construction work was carried out in the laboratory before calibration was done to ensure an optimum result.

2.5 Construction

Sequel to the design and analysis, the work was constructed. The construction was done in three different stages;

(i) The implementation of the whole work on an experimental board (breadboard)
(ii) The soldering of the work on a printed circuit board.
(iii) Coupling and casing

2.5.1 Implementation

The implementation of this device was done on the breadboard to ensure the workability of the work before soldering on the printed circuit board. The power supply was first obtained from a bench power supply. To confirm the workability of the circuits before the power supply stage was soldered.

2.5.2 Soldering

The various circuits and stages of thiswork were first designed using express PCB (a printed circuit board designing software) after which heat transfer method was employed in fabricating the PCB board. The design was printed andcopied on the glossy paper and transferred on a clean copper clad board of the same size as the PCB printout. The board was thereafter etched using an etchant (ferric chloride), making the circuit to be seen clearly on the copper clad board. After the board fabrication process,the heat-resistant components were soldered before the microcontroller was soldered. The soldering of the device was done on fabricated printed circuit boards PCB. The printed circuit board contains the voltage regulation stage, the microcontroller stage with the sensor receiving input terminals as shown below in figure 2.

2.5.3 Casing and Framing

The third phase of the device construction is the casing of the project. This work was coupled in a plastic casing that was designed and printed with a 3D printer as shown in Figure 3. Figures 4 and 5 show the inner view and the front view respectively.

2. 5.4 Calibration and Testing.

After the work has been constructed, calibration was done by comparing the work with about five existing multimeters shown in Figure 6.

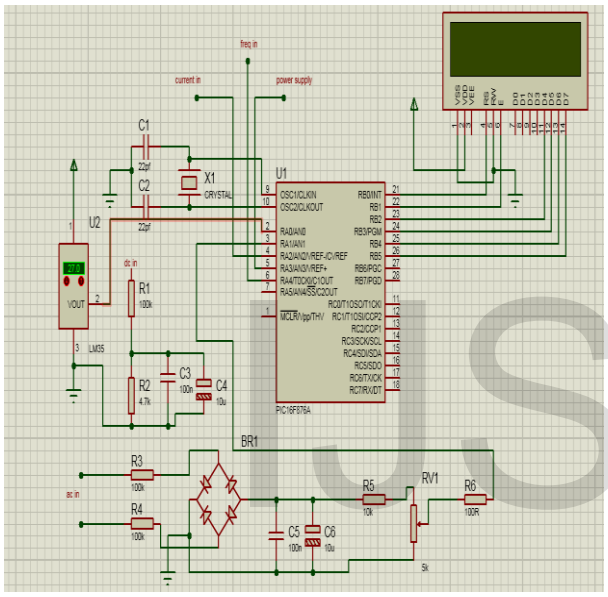

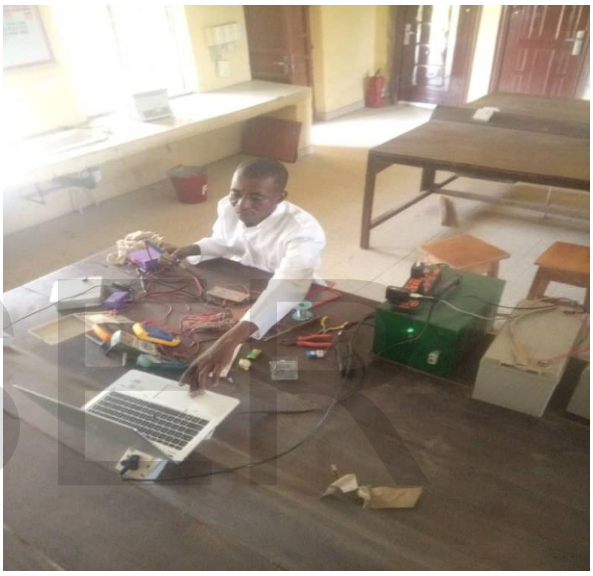

Figure 1: Combined circuit diagram of the integrated digital laboratory multimeter

Figure2:Figure 2: Showing the soldering/stage of the work.

Figure 3: The printing stage of the plastic case with 3D testing printer

Figure 4: Inner view of the work

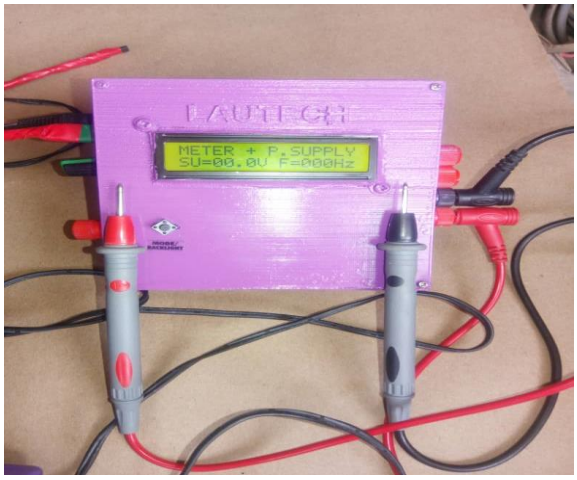

Figure 5: Front view of the completed work

Figure 6: Standard Multimeters used for calibration

3 RESULTS AND DISCUSSION

3.1 Parametric measurements

The results of the work when tested in measuring desired parameters (Frequency, current, AC voltage, DC voltage, and temperature) are presented respectively in tables 1 to 5. It was observed that the meterconstructed has high accuracy and precision value (percentage) when compared with pre-existing multimeters, as shown in tables 7 and 8 respectively.

3.1.1 AC Voltage to DC Voltage Linearity

The VAC to VDC linearity was measured for varying input AC voltage and the corresponding DC voltage obtained from the meter, (shown in Table 4.6). The graph of the VAC and VDC linearity is shown in Plate 1.

3.2 DISCUSSION

Stage by stage testing was done according to the block representation on the breadboard before the soldering of the circuit commenced on the printed circuit board. The process of testing involves the use of a pre-existing digital meter to compare the values displayed on the LCD of the work with the pre-existing meter.

The temperature was tested at room temperature, also by placing a hot metal and cold water near the temperature sensor, and the value displayed compared to the standard meters.

Table 1: The table of the frequency measured by the device

Inverter KVA	Time (Hours)	Meter 1 (Hz)	Meter 2 (Hz)	Device (Hz)
1	1	20	22	21
	2	20.5	22	21
	3	22	25	23
1.5	1	20	21.5	22
	2	24	23	22.9
	3	25	25	24.5

2	1	19	20	19.5
	2	23	22	22.5
	3	23.5	22	23.5
2.5	1	23	23.5	24
	2	23.5	24	23.5
	3	24	25	25

Table 2: The table of the current measured by the device

	Device (A)	Meter 1(A)	Meter 2(A)
DC Bulb	0.62	0.6	0.61
DC Fans	1	1.1	1.2
DC Radio	1.5	1.52	1.53

Table 3: The table of the AC Voltage measured by the device

	Device (V)	Meter (v)	Meter (v)
Main Power	171	169	170
Inverter	210	212	210.5
Generator	219.5	220	219

Table 4: The table DC voltage measured by the devices

Volt	Device (v)	Meter 1(v)	Meter 2(v)	Meter 3(v)
5V	4.9	4.9	4.95	4.93
10V	9.9	9.5	9.75	10.1
12V	12.5	12.7	12.5	12.8
20V	20.1	20	20.05	19.58

Table 5: The table for Temperature measured by the devices

	Device (^{0}C)	Meter 1(^{o}C)	Meter 2(^{o}C)
Ice block	27.5	27.3	27
Room Temp.	31	33	32.5
Soldering iron	39.5	40	40.3

Table 6: Showing the result of power supply

Input Voltage (V) AC	Output Voltage (V) DC
230	13
220	12.3
200	11
190	10.8
180	10.6
170	10.5
160	10.3
150	10.3
120	9.5

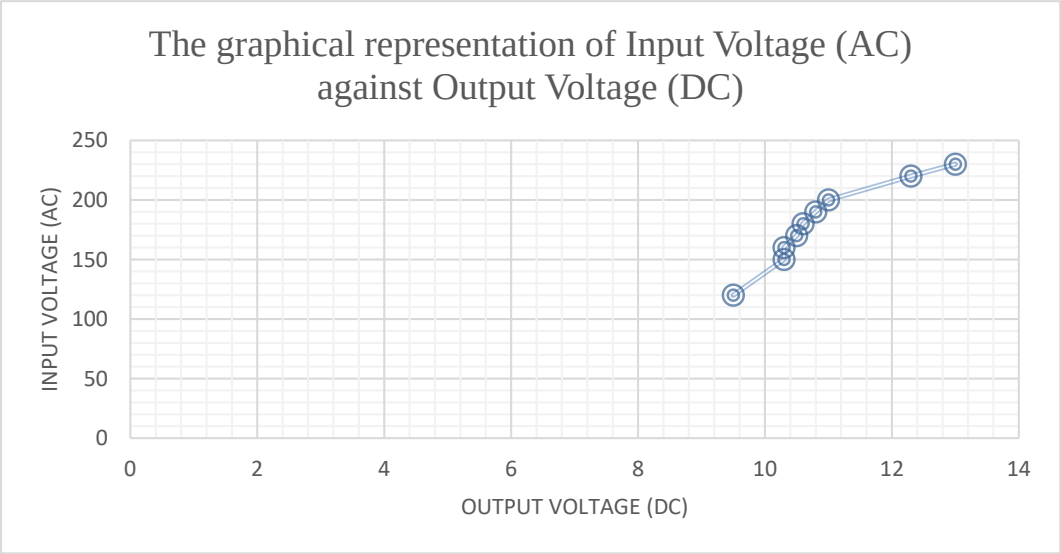

Plate 1: The graphical representation of Input Voltage (AC) against Output Voltage (DC)

Table 7: Percentage accuracy table

Parameter	Accuracy level
Temperature	98%
Current	98%
AC voltage	80%
DC Voltage	85%
Power supply	95%
Frequency	98%

Table 8: Percentage precision table

Parameter	Precision level
Temperature	95%
Current	95%
AC voltage	75%
DC Voltage	80%
Power supply	90%
Frequency	95%

Other electrical parameters were also measured and compared with the existing multimeter for accuracy purposes. DC voltage was measured through the Electronics trainer DC output varying severally to see the results both on the work and the existing meter and recorded in table 4.4 But the AC voltage measurement was tested through mains power, inverter, and generator output as recorded in table 4.3. The DC measurement was carried out by powering some of the DC powered appliances and the result shown on the screen was accurate as compared with the manufacture rated current and the readings were recorded in table 4.2 Also, the frequency measurementwas done through the mains, inverter, and generator source, and the mains result is recorded in table 4.1 with bar chart representation in plate 1.

4 CONCLUSION

The digital laboratory multimeter was carefully designed and implemented in this work, the design proved to be efficient and cost-effective. After successful implementation, testing was done by using it to measure temperature, the frequency with some other electrical parameters as stated in the scope of the work with the power supply unit, and the result was accurate while comparing it with the pre-existing ones (calibration). This developed multimeter is a handheld device with an increase in ranges of measurement which can also be used in electronics and radiation field to make experimental work easy in the Laboratories.

5 RECOMMENDATION

One of the limitations encountered in this study on making the AC part through R. M. S. (Root Mean Square) to make the reading more accurate.

Firstly to increase the speed of the measurement in real-time need to use a faster microcontroller

Secondly, we need to use a microcontroller that has high memory capacity to be able to do the measurement in real-time, because what is making the meter show different values from the meters used for calibration is, they are doing through R.M.S measurement and why the constructed meter is not doing through R.M.S measurement.

6 PROBLEMS ENCOUNTERED

The problems encountered in this project are as follows:

i. The work AC measurement accuracy reduces when the square wave signal is measured.

ii. The temperature sensor accuracy reduced with a reduction in battery voltage lower than 5v.

REFERENCES

[1]Keithley, Joseph F. (1999). The story of electrical and magnetic measurements: from 500 B.C. to the 1940s. John Wiley and Sons. pp. 196–198. ISBN 0-7803-1193-0.pp. 196–198

[2]Nue, K., Lwin, K. and Tun, H. M. (2015) 'Design And Construction Of Digital Multi-Meter Using PIC Microcontroller', *International Journal of Scientific & Technology Research*, 4(7), pp. 109–114.

[3]Mahfooz Ahmad, FaizanArif Khan, Saifur Rahman, Saima Rahman (2016) Development of a Digital Multimeter: A Low-Cost Design Approach International Journal of Engineering and Management Research , vol:6,Issue:2 page 273-293

[4]MaryoriSabalza M., Jes´us D. Borr´e O., Juan Carlos Mart´ınez Santos (2014) Design and construction of a power meter to optimize usage of the electric power page 70-74

[5]Mohammad Abdullah Al Shohel, Mashad Uddin Saleh, Biswajit Biswas Dipan, Gazi Mahamud Hasan, Md. AbulHasnatFerdous (2019) Design And Implementation of A High-Precision Digital Voltmeter page4093-4098

[6]Petrovic P. (2004)New Digital Multimeter for Accurate Measurement of Synchronously Sampled AC Signals IEEE Transactions On Instrumentation And Measurement, Vol. 53, No. 3, page 717-25

[7]William C. Dunn, (2005) Fundamentals of Industrial Instrumentation and Process Control, page 15-100